Mini Poster Pack™ / Plus Pack™ 2x6 (E 5312)
Technical tips for fast implementation

*We are pleased to provide you with a few implementation tips to ensure that you can benefit from the advantages of the **Mini Poster Pack™ / Plus Pack™** as quickly as possible.*

Egg Design:

*Our **Mini Poster Pack™ / Plus Pack™** egg cell is constructed for weight classes S, M, L.*

Dimensions:

Closed:	*Width:*	*104 mm*
	Height:	*69 mm*
	Length:	*306 mm*

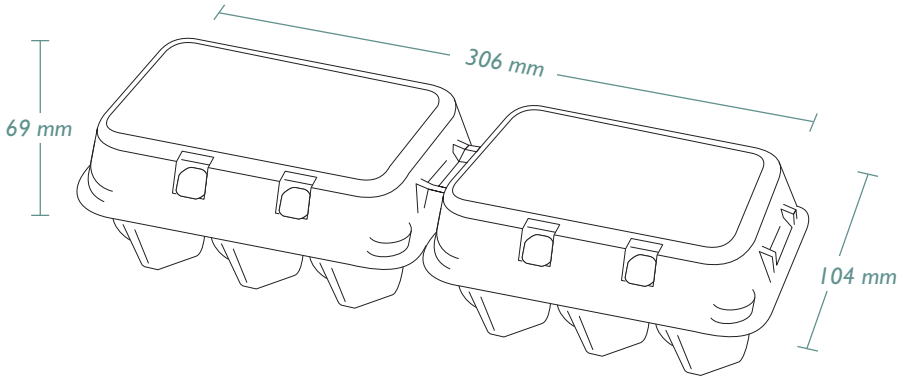

Average packaging weight:

Label:	*53.1 g*
Direct print:	*52.0 g*

Quantities:

Pallet:	*44(A) one way*	*Units per bundle: 59*	*Units per pallet: 3,304*
	79 one way UK	*Stck. pro Bündel 130*	*Stck. pro Palette 4.160*

HARTMANN

Gripper sets *Mini Poster Pack*™ / *Plus Pack*™ 2x6 (E 5312):

Moba Code:	*H045DK*											*H045DK*					
	Old Denester (Type A)											*New Denester (Type B)*					
Denester settings:	*B*	*C*	*D*	*E*	*F*	*G*	*H*	*I1*	*I2*	*J*	*K*	*D*	*G*	*J*	*I1*	*I2*	*L*
	30	*1*	*22*	*22*		*36*	*1*	*13*	*37*	*6*	*2*	*29*	*26*	*6*	*14*	*36*	*13*
Gripper Set No.:	*P157*											*800*					

Staalkat Code: *HA-014*

Colours (codes): *yellow (11), special yellow (31), special brown (25), champagne (06), light green (88), green (08), ocean (64), grey (20), white (00)*

Label on Mini Poster Pack™: *4-colour label: offset, special colours on request*

Direct print on Plus Pack™: *Top: 4-colour, front and rear: 2-colour*

Inside print: *2-colour*

label

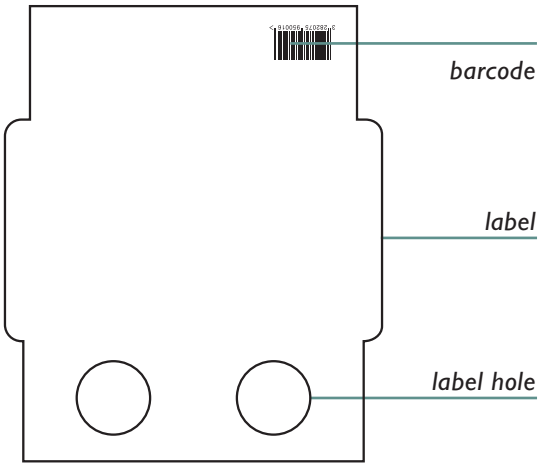

print areas

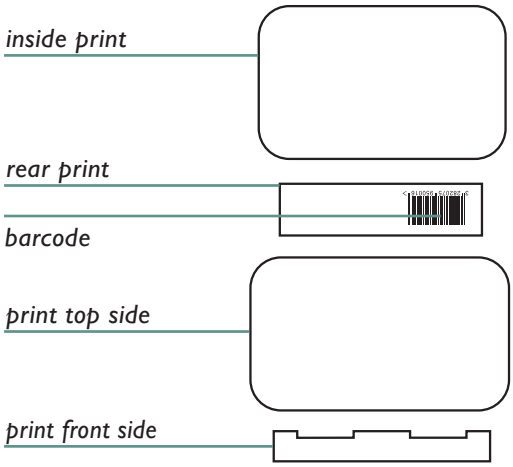

Modules for labels and print areas can be downloaded at www.hartmann-packaging.com